Chapter 1

$$E_x = \int_{-\infty}^{\infty} |x(t)|^2 dt$$

$$P_x = \lim_{T\to\infty} \frac{1}{T} \int_{-T/2}^{T/2} |x(t)|^2 dt$$

x(t-T) time shift to the right left by T

x(t+T) time shift to the left by T

x(at) signal compression by a factor of a if a>1

x(t/a) signal expansion by a factor of a if a<1

x(-t) time reversal around the y-axis

Signal is periodic with T period if x(t) = x(t+T)

$$x(t) = \underbrace{\tfrac{1}{2}[x(t)+x(-t)]}_{\text{even}} + \underbrace{\tfrac{1}{2}[x(t)-x(-t)]}_{\text{odd}}$$

$$u(t) = \begin{cases} 1 & t \geq 0 \\ 0 & t < 0 \end{cases}$$

$$x(t) = \prod\left(\frac{t}{\tau}\right)$$

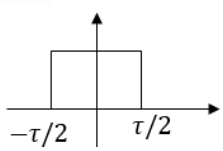

$$\delta(t) = 0 \quad t \neq 0$$

$$\int_{-\infty}^{\infty} \delta(t)dt = 1 \qquad \frac{du(t)}{dt} = \delta(t)$$

$$\phi(t)\delta(t-T) = \phi(T)\delta(t-T)$$

$$\int_{-\infty}^{\infty} \phi(t)\delta(t-T)dt = \phi(T)$$

$$e^{st} = e^{(\sigma+j\omega)t} = e^{\sigma t}e^{j\omega t} = e^{\sigma t}(\cos\omega t + j\sin\omega t)$$

System is linear

if x_1 ---> y_1 and x_2 ----> y_2 then $k_1x_1 + k_2x_2$ ---> $k_1y_1 + k_2y_2$

System is time invariant if

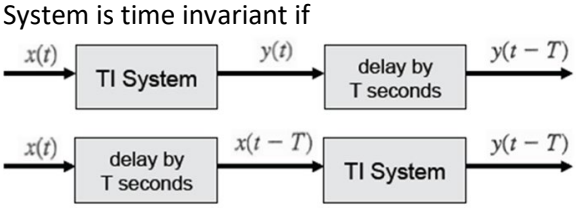

Resistor	Capacitor	Inductor
$v(t) = R\,i(t)$	$i(t) = C\dfrac{dv}{dt}$	$v(t) = L\dfrac{di}{dt}$
$x(t) = M\,\dot{y}(t) = M\dfrac{d^2y}{dt^2}$	$x(t) = k\,y(t)$	$x(t) = B\,\dot{y}(t) = B\dfrac{dy}{dt}$

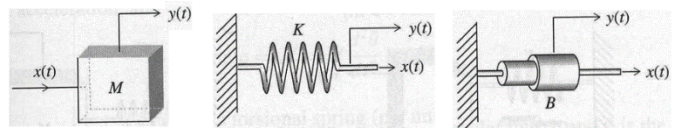

Chapter 2

Zero-input response

$$(D^N + a_1D^{N-1} + a_2D^{N-2} + \cdots + a_N)y(t) = 0$$

$$\lambda^N + a_1\lambda^{N-1} + a_2\lambda^{N-2} + \cdots + a_N = 0$$

$$(\lambda-\lambda_1)(\lambda-\lambda_2)\ldots(\lambda-\lambda_N) = 0$$

Characteristic roots: λ_1 , λ_2 , …., λ_n

$$y(t) = c_1e^{\lambda_1 t} + c_2e^{\lambda_2 t} + \cdots + c_Ne^{\lambda_N t}$$

Impulse response h(t)

$$Q(D)y(t) = P(D)x(t)$$

$$y_n(t) = c_1e^{\lambda_1 t} + c_2e^{\lambda_2 t} + \cdots + c_Ne^{\lambda_N t}$$

To solve for the constants C set all initial conditions to zero except $y_n^{N-1}(0) = 1$

$$h(t) = [P(D)y_n(t)]u(t)$$

If $M = N$ then $h(t) = b_0\,\delta(t) + [P(D)\,y_n(t)]\,u(t)$

Zero-state response

$$y(t) = x(t) * h(t)$$

$$y(t) = \int_{-\infty}^{\infty} x(\tau)h(t-\tau)d\tau$$

Convolution Property

$x_1 * x_2 = x_2 * x_1$

$x_1 * [x_2 * x_3] = [x_1 * x_2] * x_3$

$x_1 * [x_2 + x_3] = [x_1 * x_2] + [x_1 * x_3]$

$x(t) * \delta(t) = \int x(\tau)\delta(t-\tau)d\tau = x(t)$

if $x_1(t) * x_2(t) = c(t)$

then $x_1(t-T) * x_2(t) = x_1(t) * x_2(t-T) = c(t-T)$

also $x_1(t-T_1) * x_2(t-T_2) = c(t-T_1-T_2)$

Chapter 4

Laplace Transform: $X(s) = \int_{-\infty}^{\infty} x(t)e^{-st}dt$

Use partial fraction expansion and the table to find the inverse Laplace transform.

$y(t) = x(t) * h(t) \dashrightarrow Y(s) = X(s)H(s)$

Transfer Function: $H(s) = \dfrac{Y(s)}{X(s)}$

$Y(j\omega) = X(j\omega)H(j\omega)$

You can find $H(j\omega)$ from $H(s)$ by replacing s with $j\omega$

If $x(t) = A\cos(\omega_o t)$ then $y(t) = |H(j\omega_o)|A\cos(\omega_o t + \angle H(j\omega_o))$

A delay system: $y(t) = x(t-T)$ $\quad H(s) = e^{-sT}$ $\quad H(j\omega) = e^{-j\omega T}$

Group delay = $d/d\omega\,[\angle H(j\omega)]$

A differentiator: $y(t) = dx(t)/dt$ $\quad H(s) = s$ $\quad H(j\omega) = j\omega$

An integrator: $y(t) = \int x(t)dt$ $\quad H(s) = 1/s$ $\quad H(j\omega) = 1/j\omega$

System is internally stable if all the poles are in the LHP

System is unstable if at least one pole is in the RHP or there are repeated poles in the imaginary axis

System is marginally stable if there is no poles in the RHP and there are some unrepeated poles on the imaginary axis.

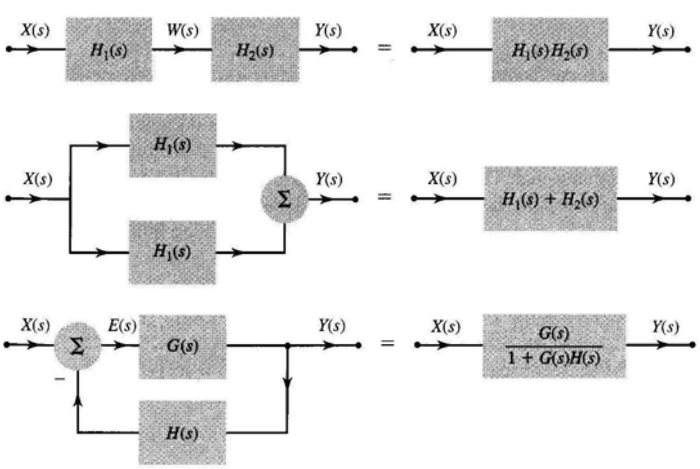

$$|H(s)|_{s=p} = b_0 \frac{r_1 r_2 \cdots r_N}{d_1 d_2 \cdots d_N}$$

$$= b_0 \frac{\text{product of the distances of zeros to } p}{\text{product of the distances of poles to } p}$$

$$\angle H(s)|_{s=p} = (\phi_1 + \phi_2 + \cdots + \phi_N) - (\theta_1 + \theta_2 + \cdots + \theta_N)$$

$$= \text{sum of zero angles to } p - \text{sum of pole angles to } p$$

Form I Realization

$$H(s) = \left(b_0 + \frac{b_1}{s} + \frac{b_2}{s^2} + \frac{b_3}{s^3}\right)\left(\frac{1}{1 + \frac{a_1}{s} + \frac{a_2}{s^2} + \frac{a_3}{s^3}}\right)$$

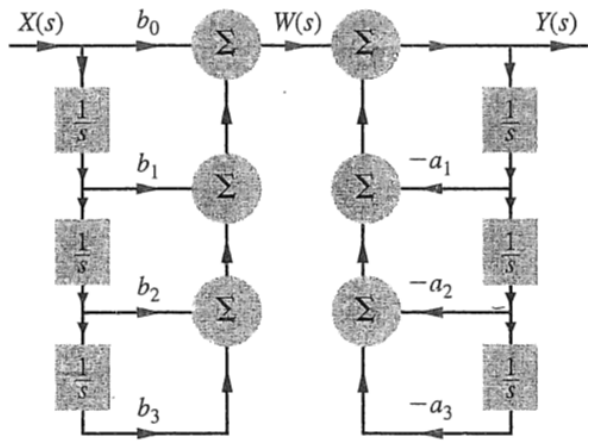

Form II realization

$$H(s) = \left(\frac{1}{1 + \frac{a_1}{s} + \frac{a_2}{s^2} + \frac{a_3}{s^3}}\right)\left(b_0 + \frac{b_1}{s} + \frac{b_2}{s^2} + \frac{b_3}{s^3}\right)$$

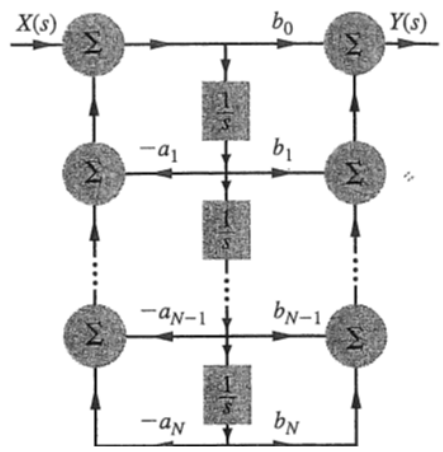

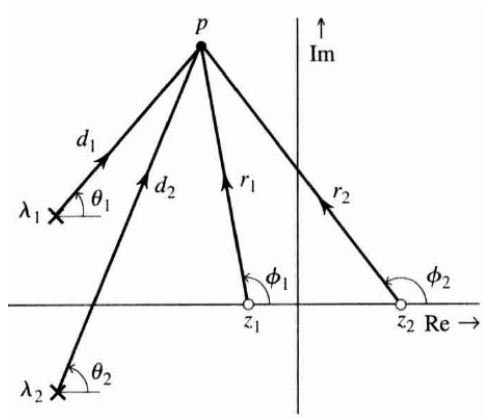

Frequencies near poles are enhanced and frequencies near zeros are suppressed.

Chapter 6

$$x(t) = a_0 + \sum_{n=1}^{\infty} a_n \cos(2\pi f_0 nt) + \sum_{n=1}^{\infty} b_n \sin(2\pi f_0 nt)$$

$$a_0 = \frac{1}{T_0}\int_{T_0} x(t)dt \qquad a_n = \frac{2}{T_0}\int_{T_0} x(t)\cos(2\pi n f_0 t)dt$$

$$b_n = \frac{2}{T_0}\int_{T_0} x(t)\sin(2\pi n f_0 t)dt$$

$$x(t) = C_0 + \sum_{n=1}^{\infty} C_n \cos(2\pi n f_0 t + \theta_n)$$

$$x(t) = \sum_{n=-\infty}^{\infty} D_n e^{j2\pi f_0 nt}$$

$$D_n = \frac{1}{T_o}\int_{T_o} x(t) e^{-j2\pi f_0 nt} dt \quad , \quad n = 0, \pm 1, \pm 2, \ldots.$$

$$\delta_{T_0}(t) = \frac{1}{T_0}\sum_{n=-\infty}^{\infty} e^{jn\omega_0 t}$$

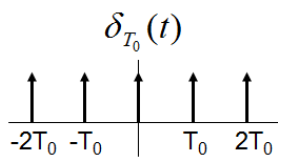

$$\delta_{T_0}(t) = \frac{1}{T_0}\left[1 + 2\sum_{n=1}^{\infty}\cos(n\omega_0 t)\right]$$

$$D_n = 0.5(a_n - jb_n)$$
$$D_{-n} = D^*{}_n = 0.5(a_n + jb_n)$$
$$D_n = 0.5C_n\angle\theta_n = 0.5C_n e^{j\theta_n}$$
$$D_0 = a_0 = C_0$$

$$a_n = D_n + D_{-n} = 2\,\mathrm{Re}\{D_n\}$$
$$b_k = j(D_n - D_{-n}) = -2\,\mathrm{Im}\{D_n\}$$
$$a_n = C_n\cos(\theta_n)$$
$$b_n = -C_n\sin(\theta_n)$$
$$a_0 = D_0 = c_0$$

$$C_n = \sqrt{a_n^{\,2} + b_n^{\,2}}$$
$$\theta_n = -\tan^{-1}\left(\frac{b_n}{a_n}\right)$$
$$C_n = 2|D_n|$$
$$\theta_n = \angle D_n$$
$$C_0 = a_0 = D_0$$

$$P = \frac{1}{T}\int_{-T/2}^{T/2}|x(t)|^2 dt \qquad P = C_0^{\,2} + \sum_{n=1}^{\infty} 0.5C_n^{\,2}$$

$$P = D_0^2 + 2\sum_{n=1}^{\infty}|D_n|^2$$

$$x(t) = \sum_{n=-\infty}^{\infty} D_n e^{jn\omega_0 t} \rightarrow \boxed{\begin{matrix} H(s) \\ H(j\omega) \end{matrix}} \rightarrow y(t) = \sum_{n=-\infty}^{\infty} H(jn\omega_0) D_n e^{jn\omega_0 t}$$

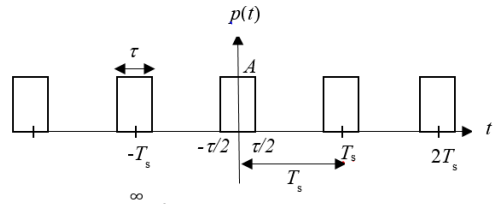

$$p(t) = \sum_{-\infty}^{\infty} \frac{A\tau}{T_s}\mathrm{sinc}(n\omega_s\tau/2)e^{jn\omega_s t}$$

$$P(\omega) = \sum_{-\infty}^{\infty} \frac{2\pi A\tau}{T_s}\mathrm{sinc}\left(\frac{n\omega_s\tau}{2}\right)\delta(\omega - n\omega_s)$$

Chapter 7

$$X(\omega) = \int_{-\infty}^{\infty} x(t)e^{-j\omega t}dt \qquad X(\omega) = |X(\omega)|e^{\angle X(\omega)}$$

$$x(t) = \frac{1}{2\pi}\int_{-\infty}^{\infty} X(\omega)e^{j\omega t}d\omega$$

$$\Delta\left(\frac{x}{\tau}\right) = \begin{cases} 0 & |x| \geq \tau/2 \\ 1 - 2|x/\tau| & |x| < \tau/2 \end{cases}$$

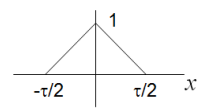

$$\mathrm{sinc}(x) = \frac{\sin x}{x}$$

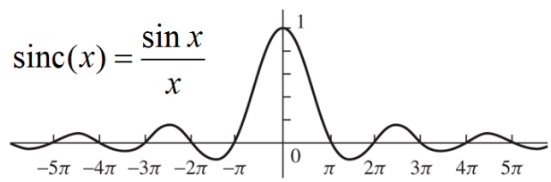

$$x(t)\cos(\omega_0 t) \Leftrightarrow \frac{1}{2}[X(\omega + \omega_0) + X(\omega - \omega_0)]$$

$$E = \int_{-\infty}^{\infty}|x(t)|^2 dt = \frac{1}{2\pi}\int_{-\infty}^{\infty}|X(\omega)|^2 d\omega$$
$$= \frac{1}{\pi}\int_{0}^{\infty}|X(\omega)|^2 d\omega$$

Chapter 8

Sampling Theorem: The minimum sampling rate (Nyquist rate) to avoid aliasing is twice or larger than the bandwidth of the signal (highest frequency in the signal).

Apparent frequency due to undersampling $f_a = |f - mf_s|$ $\quad f_a < f_s/2$

The quantization level $L = 2^n$ where n is the number of bits per sample.

Quantization error = $\Delta x/2$ where $\Delta x = (x_{max} - x_{min})/L$

$$L = 2^n$$

$$\Delta x = \frac{x_{\max} - x_{\min}}{L}$$

L : number of levels
n : Number of bits
Quantization error = $\Delta x/2$

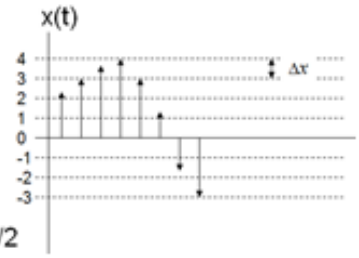

$$\pi \approx 3.1415926535$$

$$e \approx 2.7182818284$$

$$\frac{1}{e} \approx 0.3678794411$$

$$\log_{10} 2 = 0.30103$$

$$\log_{10} 3 = 0.47712$$

$$\frac{d}{dx}(\sin^{-1} ax) = \frac{a}{\sqrt{1-a^2x^2}}$$

$$\frac{d}{dx}(\cos^{-1} ax) = \frac{-a}{\sqrt{1-a^2x^2}}$$

$$\frac{d}{dx}(\tan^{-1} ax) = \frac{a}{1+a^2x^2}$$

$$\sum_{k=m}^{n} r^k = \frac{r^{n+1} - r^m}{r-1} \qquad r \neq 1$$

$$\sum_{k=0}^{n} k = \frac{n(n+1)}{2}$$

$$\sum_{k=0}^{n} k^2 = \frac{n(n+1)(2n+1)}{6}$$

$$\sum_{k=0}^{n} k\, r^k = \frac{r + [n(r-1) - 1]\, r^{n+1}}{(r-1)^2} \qquad r \neq 1$$

$$\sum_{k=0}^{n} k^2\, r^k = \frac{r[(1+r)(1-r^n) - 2n(1-r)r^n - n^2(1-r)^2 r^n]}{(1-r)^3} \qquad r \neq 1$$

Any *quadratic* equation can be reduced to the form

$$ax^2 + bx + c = 0$$

The solution of this equation is provided by

$$x = \frac{-b \pm \sqrt{b^2 - 4ac}}{2a}$$

A general *cubic* equation

$$y^3 + py^2 + qy + r = 0$$

may be reduced to the *depressed cubic* form

$$x^3 + ax + b = 0$$

by substituting

$$y = x - \frac{p}{3}$$

This yields

$$a = \tfrac{1}{3}(3q - p^2) \qquad b = \tfrac{1}{27}(2p^3 - 9pq + 27r)$$

Now let

$$A = \sqrt[3]{-\frac{b}{2} + \sqrt{\frac{b^2}{4} + \frac{a^3}{27}}} \qquad B = \sqrt[3]{-\frac{b}{2} - \sqrt{\frac{b^2}{4} + \frac{a^3}{27}}}$$

The solution of the depressed cubic is

$$x = A + B, \qquad x = -\frac{A+B}{2} + \frac{A-B}{2}\sqrt{-3}, \qquad x = -\frac{A+B}{2} - \frac{A-B}{2}\sqrt{-3}$$

and

$$y = x - \frac{p}{3}$$

$$e^{\pm j\pi/2} = \pm j$$

$$e^{\pm jn\pi} = \begin{cases} 1 & n \text{ even} \\ -1 & n \text{ odd} \end{cases}$$

$$e^{\pm j\theta} = \cos\theta \pm j\sin\theta$$

$$a + jb = re^{j\theta} \qquad r = \sqrt{a^2+b^2},\ \theta = \tan^{-1}\left(\tfrac{b}{a}\right)$$

$$(re^{j\theta})^k = r^k e^{jk\theta}$$

$$(r_1 e^{j\theta_1})(r_2 e^{j\theta_2}) = r_1 r_2 e^{j(\theta_1+\theta_2)}$$

$$\sin^3 x = \tfrac{1}{4}(3\sin x - \sin 3x)$$

$$\sin(x \pm y) = \sin x \cos y \pm \cos x \sin y$$

$$\cos(x \pm y) = \cos x \cos y \mp \sin x \sin y$$

$$\tan(x \pm y) = \frac{\tan x \pm \tan y}{1 \mp \tan x \tan y}$$

$$\sin x \sin y = \tfrac{1}{2}[\cos(x-y) - \cos(x+y)]$$

$$\cos x \cos y = \tfrac{1}{2}[\cos(x-y) + \cos(x+y)]$$

$$\sin x \cos y = \tfrac{1}{2}[\sin(x-y) + \sin(x+y)]$$

$$a\cos x + b\sin x = C\cos(x+\theta) \qquad C = \sqrt{a^2+b^2},\ \theta = \tan^{-1}\left(\tfrac{-b}{a}\right)$$

$$e^{\pm jx} = \cos x \pm j\sin x$$

$$\cos x = \tfrac{1}{2}[e^{jx} + e^{-jx}]$$

$$\sin x = \tfrac{1}{2j}[e^{jx} - e^{-jx}]$$

$$\cos(x \pm \tfrac{\pi}{2}) = \mp\sin x$$

$$\sin(x \pm \tfrac{\pi}{2}) = \pm\cos x$$

$$2\sin x \cos x = \sin 2x$$

$$\sin^2 x + \cos^2 x = 1$$

$$\cos^2 x - \sin^2 x = \cos 2x$$

$$\cos^2 x = \tfrac{1}{2}(1 + \cos 2x)$$

$$\sin^2 x = \tfrac{1}{2}(1 - \cos 2x)$$

$$\cos^3 x = \tfrac{1}{4}(3\cos x + \cos 3x)$$

$$\int e^{ax}\,dx = \frac{1}{a}e^{ax}$$

$$\int xe^{ax}\,dx = \frac{e^{ax}}{a^2}(ax - 1)$$

$$\int x^2 e^{ax}\,dx = \frac{e^{ax}}{a^3}(a^2x^2 - 2ax + 2)$$

$$\int e^{ax}\sin bx\,dx = \frac{e^{ax}}{a^2+b^2}(a\sin bx - b\cos bx)$$

$$\int e^{ax}\cos bx\,dx = \frac{e^{ax}}{a^2+b^2}(a\cos bx + b\sin bx)$$

$$\int \frac{1}{x^2+a^2}\,dx = \frac{1}{a}\tan^{-1}\frac{x}{a}$$

$$\int \frac{x}{x^2+a^2}\,dx = \frac{1}{2}\ln(x^2+a^2)$$

$$\frac{d}{dx}f(u) = \frac{d}{du}f(u)\frac{du}{dx}$$

$$\frac{d}{dx}(uv) = u\frac{dv}{dx} + v\frac{du}{dx}$$

$$\frac{d}{dx}\left(\frac{u}{v}\right) = \frac{v\frac{du}{dx} - u\frac{dv}{dx}}{v^2}$$

$$\frac{dx^n}{dx} = nx^{n-1}$$

$$\frac{d}{dx}\ln(ax) = \frac{1}{x}$$

$$\frac{d}{dx}\log(ax) = \frac{\log e}{x}$$

$$\frac{d}{dx}e^{bx} = be^{bx}$$

$$\frac{d}{dx}a^{bx} = b(\ln a)a^{bx}$$

$$\frac{d}{dx}\sin ax = a\cos ax$$

$$\frac{d}{dx}\cos ax = -a\sin ax$$

$$\frac{d}{dx}\tan ax = \frac{a}{\cos^2 ax}$$

$$\int u\,dv = uv - \int v\,du$$

$$\int f(x)\dot{g}(x)\,dx = f(x)g(x) - \int \dot{f}(x)g(x)\,dx$$

$$\int \sin ax\,dx = -\frac{1}{a}\cos ax \qquad \int \cos ax\,dx = \frac{1}{a}\sin ax$$

$$\int \sin^2 ax\,dx = \frac{x}{2} - \frac{\sin 2ax}{4a} \qquad \int \cos^2 ax\,dx = \frac{x}{2} + \frac{\sin 2ax}{4a}$$

$$\int x\sin ax\,dx = \frac{1}{a^2}(\sin ax - ax\cos ax)$$

$$\int x\cos ax\,dx = \frac{1}{a^2}(\cos ax + ax\sin ax)$$

$$\int x^2\sin ax\,dx = \frac{1}{a^3}(2ax\sin ax + 2\cos ax - a^2x^2\cos ax)$$

$$\int x^2\cos ax\,dx = \frac{1}{a^3}(2ax\cos ax - 2\sin ax + a^2x^2\sin ax)$$

$$\int \sin ax\sin bx\,dx = \frac{\sin(a-b)x}{2(a-b)} - \frac{\sin(a+b)x}{2(a+b)} \qquad a^2 \neq b^2$$

$$\int \sin ax\cos bx\,dx = -\left[\frac{\cos(a-b)x}{2(a-b)} + \frac{\cos(a+b)x}{2(a+b)}\right] \qquad a^2 \neq b^2$$

$$\int \cos ax\cos bx\,dx = \frac{\sin(a-b)x}{2(a-b)} + \frac{\sin(a+b)x}{2(a+b)} \qquad a^2 \neq b^2$$

TABLE 4.2 The Laplace Transform Properties

Operation	$x(t)$	$X(s)$
Addition	$x_1(t) + x_2(t)$	$X_1(s) + X_2(s)$
Scalar multiplication	$kx(t)$	$kX(s)$
Time differentiation	$\frac{dx}{dt}$	$sX(s) - x(0^-)$
	$\frac{d^2x}{dt^2}$	$s^2X(s) - sx(0^-) - \dot{x}(0^-)$
	$\frac{d^3x}{dt^3}$	$s^3X(s) - s^2x(0^-) - s\dot{x}(0^-) - \ddot{x}(0^-)$
	$\frac{d^nx}{dt^n}$	$s^nX(s) - \sum_{k=1}^{n} s^{n-k}x^{(k-1)}(0^-)$
Time integration	$\int_{0^-}^{t} x(\tau)\,d\tau$	$\frac{1}{s}X(s)$
	$\int_{-\infty}^{t} x(\tau)\,d\tau$	$\frac{1}{s}X(s) + \frac{1}{s}\int_{-\infty}^{0^-} x(t)\,dt$
Time shifting	$x(t-t_0)u(t-t_0)$	$X(s)e^{-st_0} \qquad t_0 \geq 0$
Frequency shifting	$x(t)e^{s_0t}$	$X(s-s_0)$
Frequency differentiation	$-tx(t)$	$\frac{dX(s)}{ds}$
Frequency integration	$\frac{x(t)}{t}$	$\int_{s}^{\infty} X(z)\,dz$
Scaling	$x(at),\ a \geq 0$	$\frac{1}{a}X\left(\frac{s}{a}\right)$
Time convolution	$x_1(t) * x_2(t)$	$X_1(s)X_2(s)$
Frequency convolution	$x_1(t)x_2(t)$	$\frac{1}{2\pi j}X_1(s) * X_2(s)$
Initial value	$x(0^+)$	$\lim_{s\to\infty} sX(s) \qquad (n > m)$
Final value	$x(\infty)$	$\lim_{s\to 0} sX(s) \qquad$ [poles of $sX(s)$ in LHP]

TABLE 4.1 A Short Table of (Unilateral) Laplace Transforms

No.	$x(t)$	$X(s)$
1	$\delta(t)$	1
2	$u(t)$	$\frac{1}{s}$
3	$tu(t)$	$\frac{1}{s^2}$
4	$t^n u(t)$	$\frac{n!}{s^{n+1}}$
5	$e^{\lambda t}u(t)$	$\frac{1}{s-\lambda}$
6	$te^{\lambda t}u(t)$	$\frac{1}{(s-\lambda)^2}$
7	$t^n e^{\lambda t}u(t)$	$\frac{n!}{(s-\lambda)^{n+1}}$
8a	$\cos bt\, u(t)$	$\frac{s}{s^2+b^2}$
8b	$\sin bt\, u(t)$	$\frac{b}{s^2+b^2}$
9a	$e^{-at}\cos bt\, u(t)$	$\frac{s+a}{(s+a)^2+b^2}$
9b	$e^{-at}\sin bt\, u(t)$	$\frac{b}{(s+a)^2+b^2}$
10a	$re^{-at}\cos(bt+\theta)\, u(t)$	$\frac{(r\cos\theta)s+(ar\cos\theta-br\sin\theta)}{s^2+2as+(a^2+b^2)}$
10b	$re^{-at}\cos(bt+\theta)\, u(t)$	$\frac{0.5re^{j\theta}}{s+a-jb}+\frac{0.5re^{-j\theta}}{s+a+jb}$
10c	$re^{-at}\cos(bt+\theta)\, u(t)$ $r=\sqrt{\frac{A^2c+B^2-2ABa}{c-a^2}}$ $\theta=\tan^{-1}\left(\frac{Aa-B}{A\sqrt{c-a^2}}\right)$ $b=\sqrt{c-a^2}$	$\frac{As+B}{s^2+2as+c}$
10d	$e^{-at}\left[A\cos bt+\frac{B-Aa}{b}\sin bt\right]u(t)$ $b=\sqrt{c-a^2}$	$\frac{As+B}{s^2+2as+c}$

TABLE 6.1 Fourier Series Representation of a Periodic Signal of Period T_0 ($\omega_0 = 2\pi/T_0$)

Series Form	Coefficient Computation	Conversion Formulas
Trigonometric	$a_0 = \frac{1}{T_0}\int_{T_0} f(t)\,dt$	$a_0 = C_0 = D_0$
$f(t) = a_0 + \sum_{n=1}^{\infty} a_n \cos n\omega_0 t + b_n \sin n\omega_0 t$	$a_n = \frac{2}{T_0}\int_{T_0} f(t)\cos n\omega_0 t\,dt$	$a_n - jb_n = C_n e^{j\theta_n} = 2D_n$
	$b_n = \frac{2}{T_0}\int_{T_0} f(t)\sin n\omega_0 t\,dt$	$a_n + jb_n = C_n e^{-j\theta_n} = 2D_{-n}$
Compact trigonometric	$C_0 = a_0$	$C_0 = D_0$
$f(t) = C_0 + \sum_{n=1}^{\infty} C_n \cos(n\omega_0 t + \theta_n)$	$C_n = \sqrt{a_n^2 + b_n^2}$	$C_n = 2\lvert D_n\rvert \quad n \geq 1$
	$\theta_n = \tan^{-1}\left(\frac{-b_n}{a_n}\right)$	$\theta_n = \angle D_n$
Exponential		
$f(t) = \sum_{n=-\infty}^{\infty} D_n e^{jn\omega_0 t}$	$D_n = \frac{1}{T_0}\int_{T_0} f(t)e^{-jn\omega_0 t}\,dt$	

TABLE 7.2 Fourier Transform Operations

Operation	$x(t)$	$X(\omega)$
Scalar multiplication	$kx(t)$	$kX(\omega)$
Addition	$x_1(t) + x_2(t)$	$X_1(\omega) + X_2(\omega)$
Conjugation	$x^*(t)$	$X^*(-\omega)$
Duality	$X(t)$	$2\pi x(-\omega)$
Scaling (a real)	$x(at)$	$\frac{1}{\lvert a\rvert}X\left(\frac{\omega}{a}\right)$
Time shifting	$x(t - t_0)$	$X(\omega)e^{-j\omega t_0}$
Frequency shifting (ω_0 real)	$x(t)e^{j\omega_0 t}$	$X(\omega - \omega_0)$
Time convolution	$x_1(t) * x_2(t)$	$X_1(\omega)X_2(\omega)$
Frequency convolution	$x_1(t)x_2(t)$	$\frac{1}{2\pi}X_1(\omega) * X_2(\omega)$
Time differentiation	$\frac{d^n x}{dt^n}$	$(j\omega)^n X(\omega)$
Time integration	$\int_{-\infty}^{t} x(u)\,du$	$\frac{X(\omega)}{j\omega} + \pi X(0)\delta(\omega)$
Modulation	$x(t)\cos(\omega_0 t)$	$\frac{1}{2}[X(\omega + \omega_0) + X(\omega - \omega_0)]$

TABLE 7.1 Fourier Transforms

No.	$x(t)$	$X(\omega)$	
1	$e^{-at}u(t)$	$\dfrac{1}{a+j\omega}$	$a>0$
2	$e^{at}u(-t)$	$\dfrac{1}{a-j\omega}$	$a>0$
3	$e^{-a\|t\|}$	$\dfrac{2a}{a^2+\omega^2}$	$a>0$
4	$te^{-at}u(t)$	$\dfrac{1}{(a+j\omega)^2}$	$a>0$
5	$t^n e^{-at}u(t)$	$\dfrac{n!}{(a+j\omega)^{n+1}}$	$a>0$
6	$\delta(t)$	1	
7	1	$2\pi\delta(\omega)$	
8	$e^{j\omega_0 t}$	$2\pi\delta(\omega-\omega_0)$	
9	$\cos\omega_0 t$	$\pi[\delta(\omega-\omega_0)+\delta(\omega+\omega_0)]$	
10	$\sin\omega_0 t$	$j\pi[\delta(\omega+\omega_0)-\delta(\omega-\omega_0)]$	
11	$u(t)$	$\pi\delta(\omega)+\dfrac{1}{j\omega}$	
12	$\operatorname{sgn} t$	$\dfrac{2}{j\omega}$	
13	$\cos\omega_0 t\, u(t)$	$\dfrac{\pi}{2}[\delta(\omega-\omega_0)+\delta(\omega+\omega_0)]+\dfrac{j\omega}{\omega_0^2-\omega^2}$	
14	$\sin\omega_0 t\, u(t)$	$\dfrac{\pi}{2j}[\delta(\omega-\omega_0)-\delta(\omega+\omega_0)]+\dfrac{\omega_0}{\omega_0^2-\omega^2}$	
15	$e^{-at}\sin\omega_0 t\, u(t)$	$\dfrac{\omega_0}{(a+j\omega)^2+\omega_0^2}$	$a>0$
16	$e^{-at}\cos\omega_0 t\, u(t)$	$\dfrac{a+j\omega}{(a+j\omega)^2+\omega_0^2}$	$a>0$
17	$\operatorname{rect}\left(\dfrac{t}{\tau}\right)$	$\tau\operatorname{sinc}\left(\dfrac{\omega\tau}{2}\right)$	
18	$\dfrac{W}{\pi}\operatorname{sinc}(Wt)$	$\operatorname{rect}\left(\dfrac{\omega}{2W}\right)$	
19	$\Delta\left(\dfrac{t}{\tau}\right)$	$\dfrac{\tau}{2}\operatorname{sinc}^2\left(\dfrac{\omega\tau}{4}\right)$	
20	$\dfrac{W}{2\pi}\operatorname{sinc}^2\left(\dfrac{Wt}{2}\right)$	$\Delta\left(\dfrac{\omega}{2W}\right)$	
21	$\displaystyle\sum_{n=-\infty}^{\infty}\delta(t-nT)$	$\omega_0\displaystyle\sum_{n=-\infty}^{\infty}\delta(\omega-n\omega_0)$	$\omega_0=\dfrac{2\pi}{T}$
22	$e^{-t^2/2\sigma^2}$	$\sigma\sqrt{2\pi}\,e^{-\sigma^2\omega^2/2}$	

Modulation